Note bolt thread area should be on outside of hoist

If this print has colored cables they are for easier understanding of how they are strung.
Cables from the factory are colored too. They won't all match to below colors.

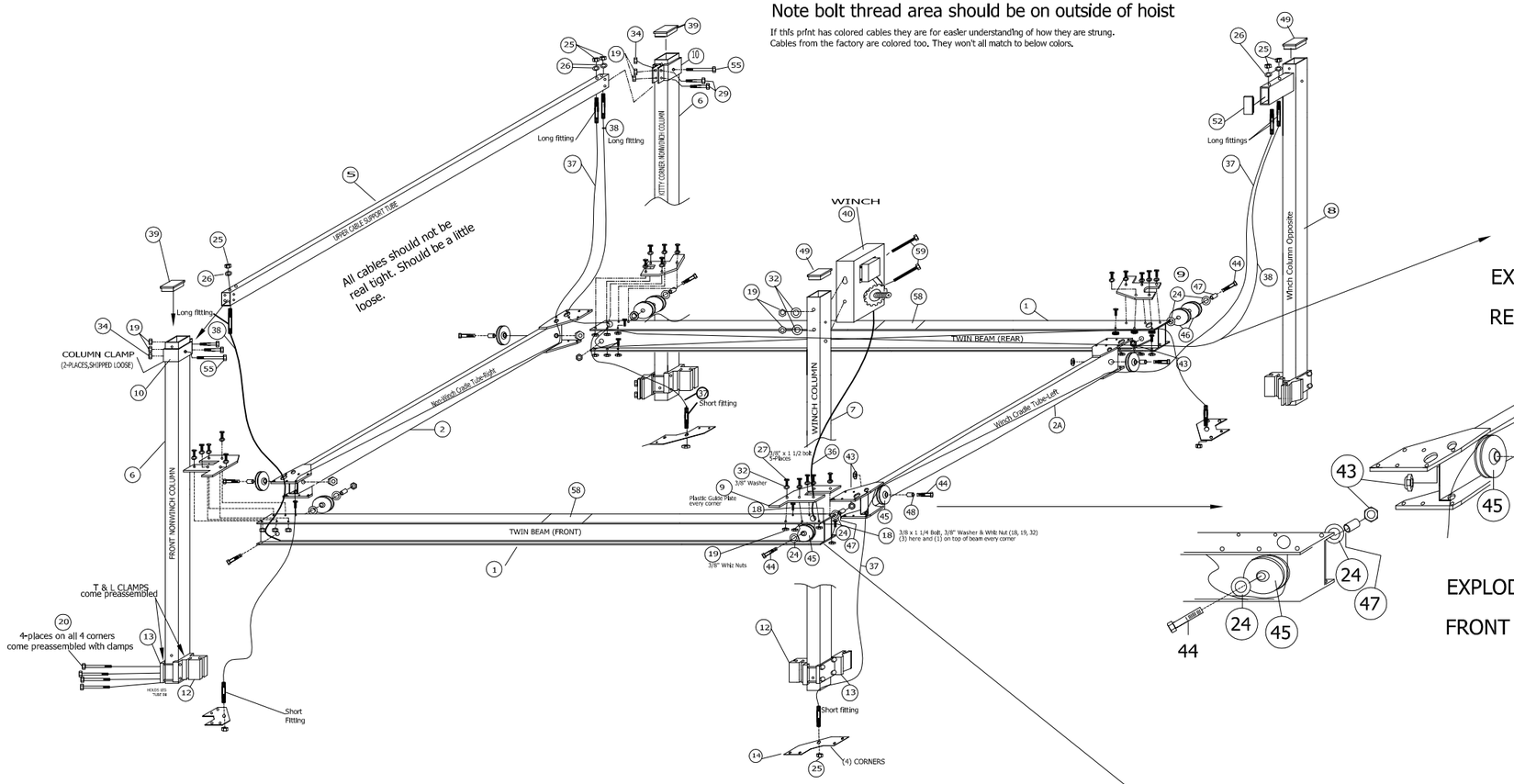

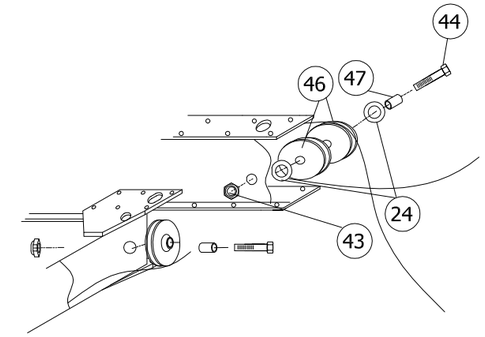

EXPLODED VIEW OF SHEAVE ASSEMBLIES LOCATED IN REAR TWIN BEAM AND CRADLE TUBE LEFT OR RIGHT

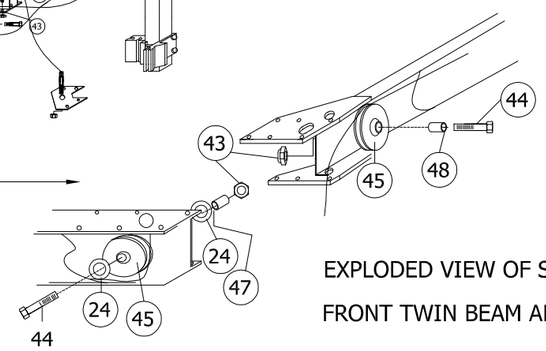

EXPLODED VIEW OF SHEAVE ASSEMBLIES LOCATED IN FRONT TWIN BEAM AND CRADLE TUBE LEFT OR RIGHT

TWIN BEAMS(#1) AND CRADLE TUBES(#2 & 2A)
COME PRE-CABLED
T & L CLAMPS ARE INSTALLED (13)&(12)
ON THE COLUMNS AT THE FACTORY

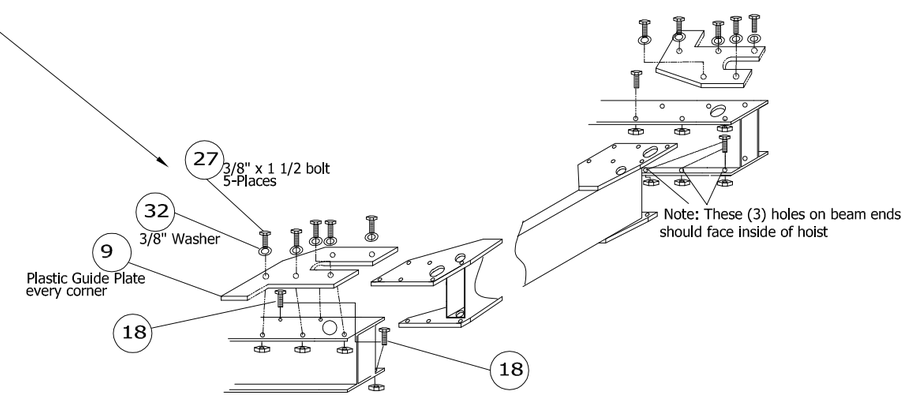

EXPLODED VIEW OF CORNER ASSEMBLY

SEE PARTS LIST FOR ABOVE PART NUMBERS
DOCUMENT# A-MH-V45R10PARTSLIST AND
DOCUMENT# A-MH-V35R10PARTSLIST
READ MANUAL BEFORE USING HOIST
Manual, parts list and drawing on the web WWW.CRAFTLANDER.COM

NOTE: WHEN ORDERING REPLACEMENT PARTS A SERIAL NUMBER WILL BE REQUIRED TO ENSURE RECEIPT OF CORRECT ITEMS

INNER FRAME ASSEMBLY

Rev	Date	Description	Int

NuCraft® Metal Products
402 Southline Rd.
Roscommon,MI 48653
CRAFTLANDER®

Scale: None	Approved by:	Drawn by: RLW
Date: 3/11/09		
Assembly and part locations for V35108,V35120 after year 2010 V45108. V45114. & V45120 after year 2009		Drawing Number A-MH-V3545R10-2